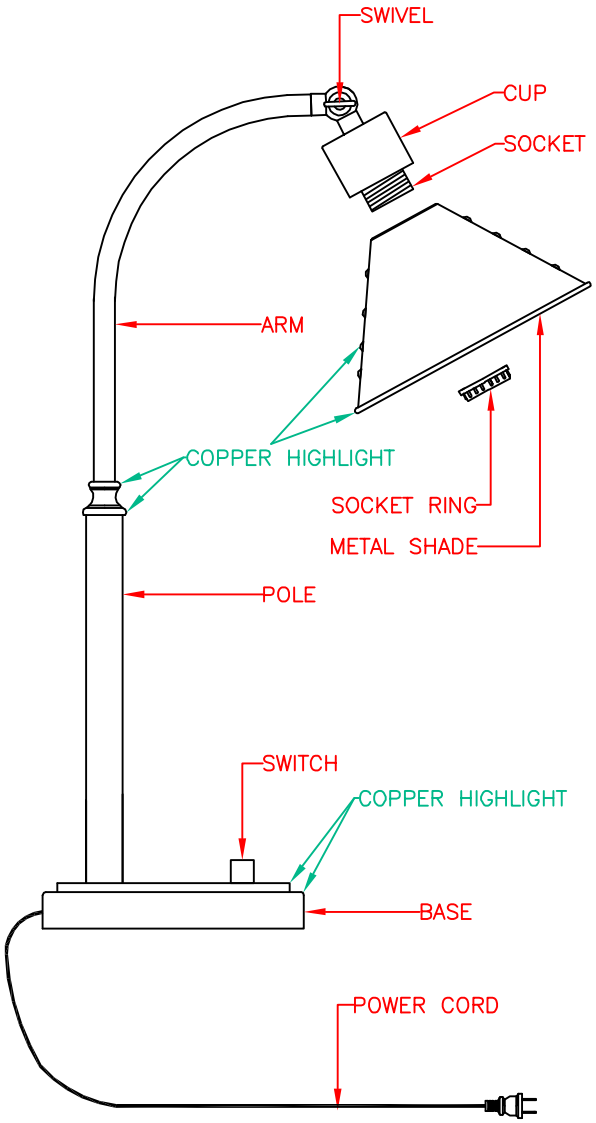

PRODUCT SPECIFICATIONS

OVERALL ASSEMBLED DIMENSIONS

HEIGHT: 59.7 CM (23–1/2"), WIDTH: 36.2 CM (14–1/4").
EXTENSION: 18.5 CM (7–1/4").

- ☐ **1 LIGHT:** UL LISTED, 60 WATT, MEDIUM BASE E–26 CERAMIC SOCKET. ON/OFF BASE SWITCH LOCATED AS SHOWN. WHITE METAL SOCKET RING IS INCLUDED.
- ☐ **CUP:** PAINTED STEEL IN OIL RUBBED BRONZE FINISH, 5 CM (2") DIA. x 4 CM (1–9/16") HEIGHT. SHAPED AS SHOWN.
- ☐ **METAL SHADE:** PAINTED STEEL IN OIL RUBBED BRONZE FINISH WITH COPPER ACCENTS ON OUTSIDE AND WHITE FINISH ON INSIDE, 18.5 CM (7–1/4") DIA. x 10.2 CM (4") HEIGHT. SHAPED AS SHOWN.
- ☐ **ARM:** PAINTED STEEL IN OIL RUBBED BRONZE FINISH, 1.6 CM (5/8") DIA. TUBING., 15 CM (5–7/8") WIDTH x 26.7 CM (10–1/2") HEIGHT.
- ☐ **POLE:** PAINTED STEEL IN OIL RUBBED BRONZE FINISH, 2.5 CM (1) DIA. TUBING. x 25.4 CM (10") LENGTH.
- ☐ **BASE:** PAINTED STEEL IN OIL RUBBED BRONZE FINISH, 18 CM (7") DIA. MAX. x 3.1 CM (1–1/4") HEIGHT. FELT PAD INSTALLED ON BOTTOM OF BASE.
- ☐ **CORD:** UL LISTED, MIN 183 CM (6 FT.) LENGTH, 18 AWG., 105°C, TYPE SPT–2, SILVER/CLEAR COLOR. COPPER MATERIAL, PLATED SILVER. WIRES MUST BE LEAD FREE.
- ☐ **LABELS:** UL AND CSA OR CUL, MANUFACTURING DATE, MODEL # AND COUNTRY OF ORIGIN LABEL PROVIDED. RELAMPING LABEL FOR 60 WATT MAX. TYPE "A" BULB PROVIDED NEAR SOCKET.

PACKAGING AND SHIPPING DETAILS

- ☐ THE LAMP IS DISASSEMBLED FOR SHIPPING. EACH PART IS CAREFULLY WRAPPED IN A PLASTIC BAG AND PLACED SECURELY IN THE INNER PACKING SO IT CAN NOT MOVE AROUND DURING SHIPPING. A SMALL BAG OF SILICA IS INCLUDED IN THE PACKAGE.
- ☐ THE CARTON IS MADE OF DOUBLE WALL, CORRUGATED CARDBOARD "A MA A". BROWN IN COLOR. THE INNER PACKING IS DIE–CUT CARDBOARD OR STYROFOAM TO PROTECT AND SECURE THE LAMP AND MUST PASS THE FEDEX AND ISTA–3A DROP TEST REQUIREMENTS.
- ☐ EACH CARTON SHALL BE PRINTED WITH A LINE DRAWING AND THE KENROY HOME NAME AND LOGO, MODEL NUMBER AND FINISH, EACH CARTON SHALL BE PROVIDED A UPC LABEL. THE UPC BAR CODE AS FOLLOWS: 053392133764.

OTHER DETAILS

- ☐ MODEL 32947ORB INSTRUCTIONS ARE TO BE PACKED WITH EACH LAMP. INSTRUCTIONS MUST BE PRINTED CLEARLY ON QUALITY PAPER.
- ☐ ALL VISIBLE PARTS, EXCEPT SHADE, MUST MATCH LAMP FINISH UNLESS OTHERWISE SPECIFIED.
- ☐ ALL BAGS MUST BE LABELED WITH OFFICIAL "THIS BAG IS NOT A TOY" STATEMENT.
- ☐ LAMP MUST REST FLAT ON SURFACE AND NOT ROCK. LAMP MUST PASS AN 8° TILT TEST.
- ☐ ASSEMBLY TIME: 5 MINUTES.
- ☐ THE UL NUMBER IS E330024.
- ☐ DIMS OF BOX: 25.4 CM (10") LENGTH x 24.1 CM (9–1/2") WIDTH x 66 CM (26") HEIGHT. (CUFT.: 1.43')
- ☐ NET WEIGHT: 5.7 LBS. GROSS WEIGHT: 7.7 LBS.

KENROY HOME
3723 Regent Boulevard
JACKSONVILLE, FL. 32224
PHONE: 904–642–4340
FAX: 904–642–4150

THIS DOCUMENT AND THE INFORMATION THAT IT DISCLOSES IS THE EXCLUSIVE PROPERTY OF KENROY HOME. ANY REPRODUCTION OR USE OF THIS DRAWING IN PART OR IN WHOLE, WITHOUT THE EXPRESS CONSENT OF THE PROPRIETOR IS PROHIBITED. © 2016 KENROY HOME.

DATE: 6/29/2016	SCALE: NONE	DRAWN BY: HENRY	REVISION DATE:	MODEL #: 32947ORB
			REVISION DATE:	
			REVISION DATE:	FINISHES: OIL RUBBED BRONZE
REFERENCE: ALLEN TABLE LAMP		APPROVAL:	REVISION DATE:	PAGE: 1 OF: 1