MODEL: 93882GLD
PACKING DIAGRAM

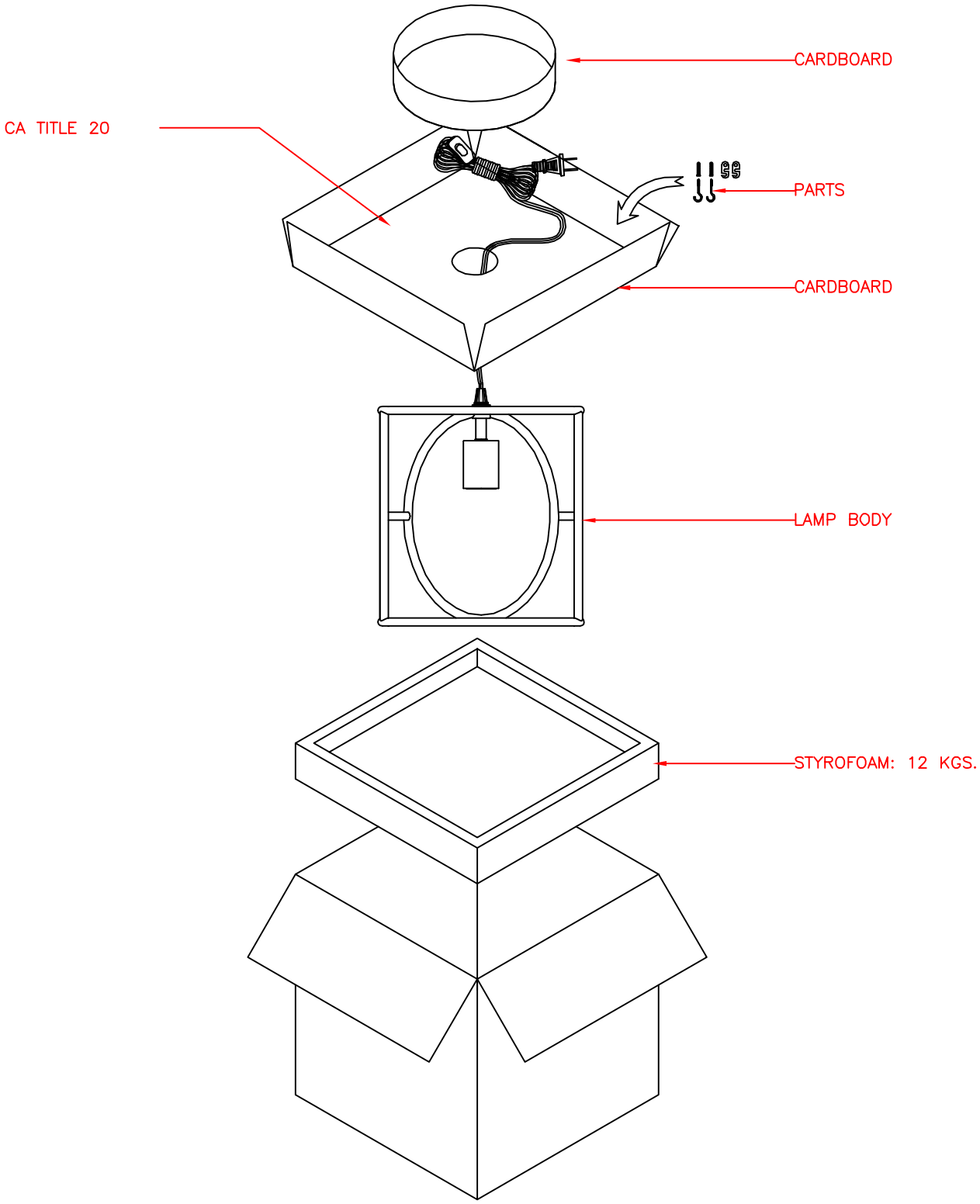

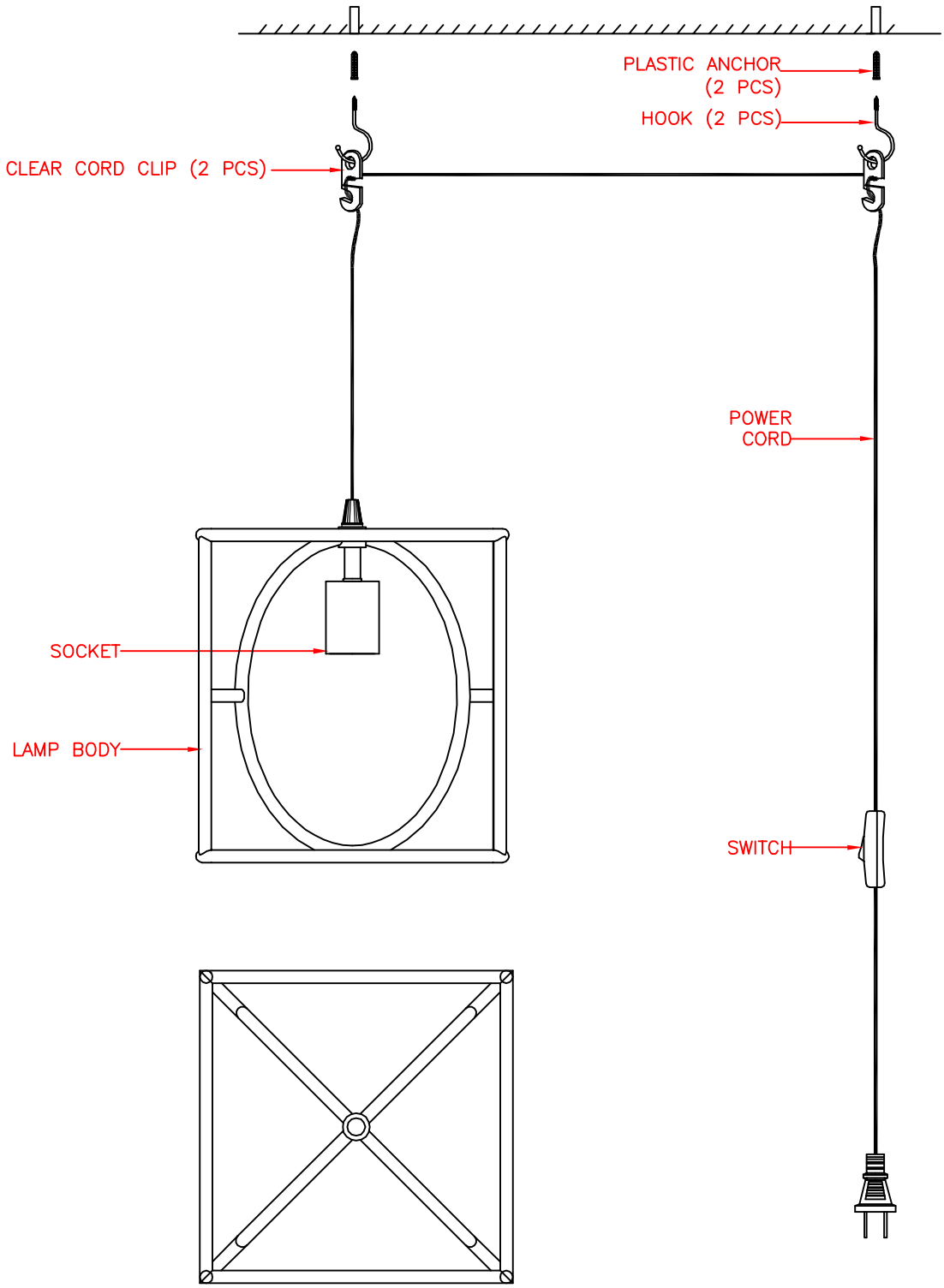

TOP VIEW

Intertek
5008881

ASSEMBLY INSTRUCTIONS

READ AND SAVE THESE INSTRUCTIONS

READ INSTRUCTIONS ALL THE WAY THROUGH PRIOR TO ASSEMBLY.

MAKE SURE ALL PARTS ARE FIRMLY TIGHTENED.

UNPACK THE LAMP

YOU SHOULD HAVE RECEIVED THE FOLLOWING PARTS IN THE PACKAGE: (2) PLASTIC ANCHORS, (2) HOOKS, (2) CORD CLIPS AND LAMP BODY. TO PROTECT THE FINISH, PLACE ALL PARTS ON A SOFT SURFACE.

ASSEMBLE THE LAMP

1. CAREFULLY ORGANIZE AND PLACE ALL PARTS ON A SMOOTH, FLAT SURFACE. LINE UP ALL OF THE PARTS ACCORDING TO THE ASSEMBLY DIAGRAM.

2. PRIOR TO INSTALLING THE BULB, PLEASE INSPECT SOCKET FOR SILICA PACKET. IF PACKET IS PRESENT, REMOVE AND THROW AWAY. DO NOT EXPOSE TO CHILDREN AND PETS.

3. INSTALL A 60 WATT MAXIMUM MEDIUM BASE TYPE "A" BULB (NOT INCLUDED) INTO THE SOCKET.

4. POSITION THE LAMP BODY AS DESIRED ON CEILING AND MARK POINTS FOR PLASTIC ANCHORS OR HOOKS TO BE INSTALLED.

5. DRILL PILOT HOLES ON THE MARKED SPOTS AND INSERT PLASTIC ANCHORS INTO THE HOLES. (IF INSTALLING TO STUD, SKIP THIS STEP)

6. SCREW HOOKS TO THE CEILING AT MARKED POINTS OR THE PLASTIC ANCHERS THAT HAVE BEEN INSTALLED.

7. ADJUST THE HEIGHT OF THE LAMP BODY AS DESIRED AND HANG THE LAMP BODY TO THE HOOKS WITH CORD CLIPS AS SHOWN.

8. PLUG THE POWER CORD INTO AN OUTLET AND TURN ON AT SWITCH.

BULB REPLACEMENT

1. BEFORE REPLACING THE BULB, BE SURE THAT THE SHADE AND BULB ARE COOL AND LAMP IS UNPLUGGED.

2. UNSCREW EXISTING BULB FROM SOCKET AND REPLACE WITH A NEW BULB. PLUG POWER SUPPLY CORD BACK INTO OUTLET.

TROUBLE SHOOTING

1. IF YOUR LAMP DOES NOT LIGHT, CHECK PLUG AT THE OUTLET. MAKE SURE THE PLUG IS FULLY AND PROPERLY INSERTED INTO THE POWER OUTLET.

2. IF LAMP STILL DOES NOT LIGHT, UNPLUG FROM OUTLET. CHECK THE BULB FOR A BROKEN FILAMENT. REPLACE BULB IF NECESSARY, PLUG IN LAMP AND TURN IT ON.

3. IF THE LAMP STILL DOES NOT LIGHT, PLEASE CONTACT YOUR DISTRIBUTOR OR PLACE OF PURCHASE.

IMPORTANT SAFETY INSTRUCTIONS

THIS PORTABLE LAMP HAS A POLARIZED PLUG (ONE BLADE IS WIDER THAN THE OTHER) AS A FEATURE TO REDUCE THE RISK OF ELECTRIC SHOCK. THIS PLUG WILL FIT IN A POLARIZED OUTLET ONLY ONE WAY. IF THE PLUG DOES NOT FIT FULLY IN THE OUTLET, REVERSE THE PLUG. IF IT STILL DOES NOT FIT, CONTACT A QUALIFIED ELECTRICIAN. NEVER USE WITH AN EXTENSION CORD UNLESS PLUG CAN BE FULLY INSERTED. DO NOT ALTER THE PLUG.

c ETL LISTED us
Intertek
5008881